ROCK-IT™ HELICAL PILE LEAD SECTION

PENETRATE ROCKY/HIGH BLOW COUNT SOIL

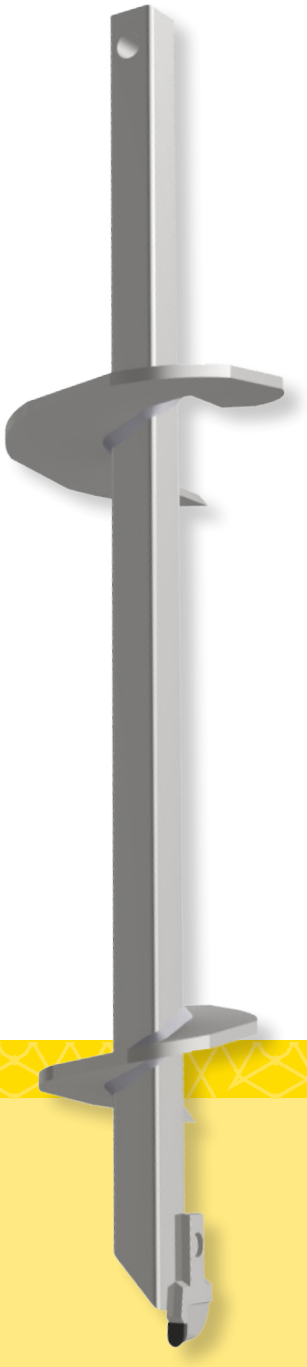

The ROCK-IT™ lead section by Hubbell Power Systems is an innovative solution to penetrate rocky or high blow count soils without pre-drilling or field modification. The single carbide, patent pending design was developed after site testing of several rock anchor configurations to provide an economical, yet proven solution to reach load-bearing depths in high blow count material.

FEATURES AND BENEFITS

- Wear resistant, offset carbide tip designed to break through rocky soil
- Reduced installation time to save time and money
- Reduced spiking of torque and chatter during installation for better pile performance and a safer alternative

VOICE OF THE CUSTOMER

- "The CHANCE ROCK-IT anchor performed remarkably well at a site where we typically cannot install a standard CHANCE helical anchor due to shallow limestone layers. It has given us more opportunities to provide a helical anchor system in soil conditions that we would typically have to walk away from" - Josh Lindberg- Helical Concepts, Inc., Wylie, TX.
- "The ROCK-IT lead definitely helped us to penetrate the thin hard sandstone lense encountered at 11 feet. In discussing the test results with my installers, we believe the ROCK-IT would be our standard lead section"- Michael Kerker, PE- Highlands Ranch, CO.
- "The ROCK-IT performed so well, I recommend the technology should be standard on all lead sections"- Dino Vito- EBS- Ontario, Canada

TYPE	CATALOG NO.	DESCRIPTION
SS150	C1501488	Lead, SS150, 6/8 x 3 ft., ROCK-IT
	C1501489	Lead, SS150, 8/10 x 3 ft., ROCK-IT
	C1501505	Lead, SS150, 8/10 x 5 ft., ROCK-IT
SS175	C1501507	Lead, SS175, 8/10 x 5 ft., ROCK-IT
	C1501509	Lead, SS175, 8/10/12 x 5 ft., ROCK-IT
	C1501511	Lead, SS175, 6/8 x 3 ft., ROCK-IT
	C1501513	Lead, SS175, 8/10 x 3 ft., ROCK-IT

HUBBELL Power Systems, Inc.

©2016 Hubbell Incorporated | hpsliterature@hubbbell.com | abchance.com

Helical Pulldown® Micropile
Round (Pipe) Shaft

What is a Helical Pulldown® Micropile?

The Helical Pulldown® Micropile is a method for constructing a grout column around the shaft of a standard Helical Pile (pipe and solid square shaft). It continues to provide solutions to traditional foundation problems for a growing number of applications.

Round (Pipe) Shaft Installation

To begin the process, a helical pile is placed into the soil by applying torque to the shaft. The helical shaped plates create a tremendous pulling force that keeps the pile advancing downward into the soil. After the lead section with the helical plates penetrates the soil, a Lead Displacement Plate and Extension Shaft are bolted onto the pile. Soil is forced outward (by the displacement plates) as the helical pile is advanced, creating a cylindrical void around the shaft. From a reservoir at the surface, a flowable grout immediately fills this void, surrounding and encapsulating the shaft. Filling the pile shaft will gain higher capacity if needed. Additional extensions and displacement plates are added until the helical bearing plates reach competent load-bearing soil.

Key Benefits & Applications

- Faster construction
- Building on weak soil sites
- Additional corrosion protection
- Increased capacity
- Resistance to buckling in weak surface soils
- New construction foundations
- Underpinning foundations

The Helical Pulldown® Micropile does not require removing spoils from the site. By combining both end-bearing on the helical plates and skin friction along the rough surface of the grout column, the result is a higher capacity pile system.

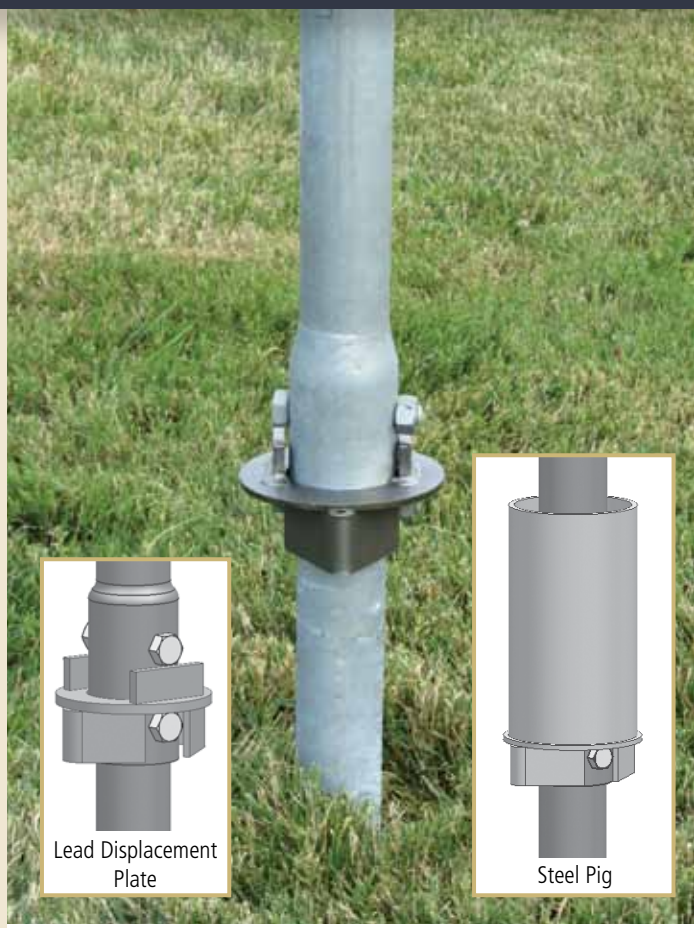

Cat. No.	Description
C1500961	RS2875 Extension Displacement Plate for 6″ Grout Columns
C1500962	RS3500 Extension Displacement Plate for 6″ Grout Columns
C1500963	RS3500 Extension Displacement Plate for 8″ Grout Columns
C1500964	RS4500 Extension Displacement Plate for 6″ Grout Columns
C1500965	RS4500 Extension Displacement Plate for 8″ Grout Columns
C1500966	RS2875 Lead Displacement Plate for 6″ Grout Columns
C1500967	RS3500 Lead Displacement Plate for 6″ Grout Columns
C1500972	RS3500 Lead Displacement Plate for 8″ Grout Columns
C1500980	RS4500 Lead Displacement Plate for 6″ Grout Columns
C1500981	RS4500 Lead Displacement Plate for 8″ Grout Columns
C1500989	RS2875 Steel Pig for 6″ Grout Columns
C1500993	RS3500 Steel Pig for 6″ Grout Columns
C1500994	RS3500 Steel Pig for 8″ Grout Columns
C1500995	RS4500 Steel Pig for 6″ Grout Columns
C1500996	RS4500 Steel Pig for 8″ Grout Columns

CHANCE™ DOWN. RIGHT. SOLID.
CHANCE Civil Construction
Hubbell Power Systems
210 North Allen Street
Centralia, Missouri 65240

Hubbell has a policy of continuous product improvement. We reserve the right to change design and specifications without notice.

Combination (SS-RS) Helical Cast Transition

Adapts type SS leads to type RS extensions

Description

The transition section adapts type Square Shaft (SS) helical lead sections to type Round Shaft (RS) extensions. The type RS-SS combination transition is used mainly in compression applications in areas where soft/loose soils are located above hard/dense soils. The type RS material is less susceptible to buckling, provides greater lateral capacity, and greater moment capacity, than type SS material.

A square shaft lead will allow better penetration of the helices into hard/dense material than round shaft (RS). SS reduces the occurrence of "spin-out" (loss of thrust of helices).

Key Benefits

- Tapered design allows for smoother transition
- Reduced installing time (no tool change)
- Transition matches torque and compression capacity of respective shafts
- Standard hardware with SS extensions
- Faster lead time and availability of SS
- Meet project specifications with RS & SS
- Spin-Out prevention
- Inventory turnover by using existing SS Leads
- Major cost savings over old SS to RS Transition

The design should be prepared by a Registered Professional.

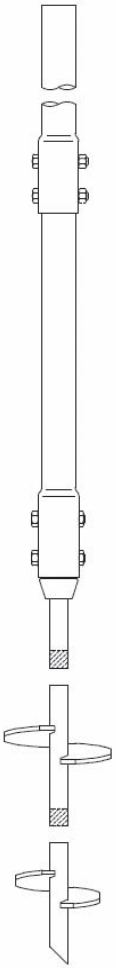

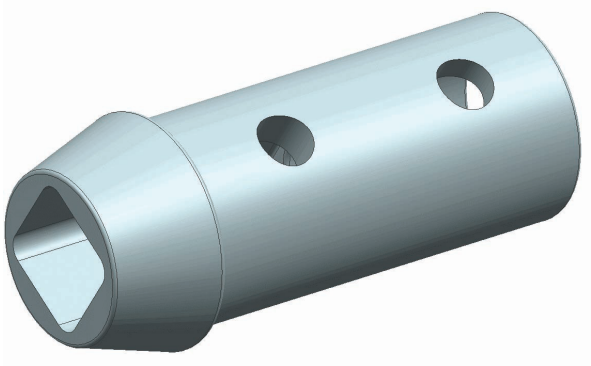

Catalog No#	Description	Torque Ratings
C1500896	SS5/SS150 square shaft to a RS2875.276 & RS2875.203 diameter round shaft	7,000 ft-lb
C1500895	SS175 square shaft to a RS3500.300 dia round shaft	11,000 ft-lb
C1500937	SS200 square shaft to a RS3500.300 dia round shaft	13,000 ft lb

CHANCE™
CHANCE Civil Construction
Hubbell Power Systems
210 North Allen Street
Centralia, Missouri 65240

Hubbell has a policy of continuous product improvement. We reserve the right to change design and specifications without notice.

© Copyright 2011 & 2012 Hubbell Incorporated | Printed in U.S.A. | www.hubbellpowersystems.com/abchance

LC Underpinning Bracket

Competitive Advantage for Price-Sensitive Projects

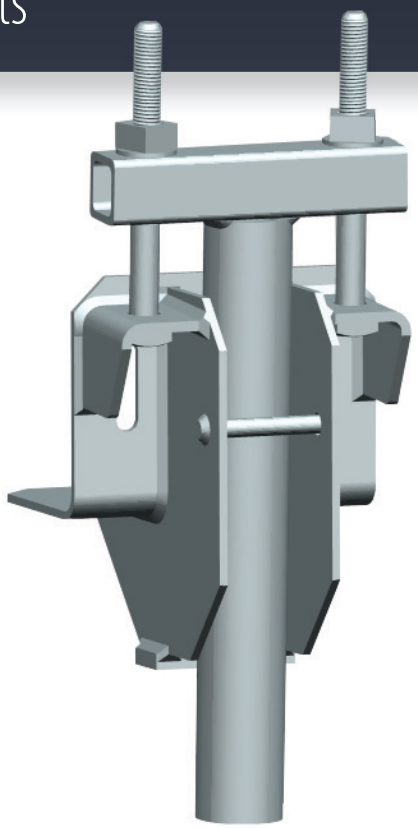

Description

The LC Bracket delivers recommended performance with a reduced weight, making it a cost-effective underpinning solution. This is the answer for many installers who require another option when entering highly competitive areas where price is the main determining factor.

Smaller and lighter than the standard C1500121, the LC Underpinning Bracket is strong and tested suitable for many projects. The LC Bracket utilizes the standard T-Pipe and Extensions, reducing extra inventory and confusion on the jobsite.

Key Benefits

- Light Weight
- Common Ratings
- High Quality
- Simple Design
- Reduced Profile
- Standard T-Pipes/Extensions

Performance Comparison

	Weight	Width	Ratings*
LC UP Bracket C1500934 (LC)	26 lb	9.5″	15kip working/30kip ultimate
Standard UP Bracket C1500121	36.2 lb	14″	20kip working/40kip ultimate

* Using standard T-Pipe

CHANCE™ Since 1912
CHANCE Civil Construction
Hubbell Power Systems
210 North Allen Street
Centralia, Missouri 65240

Hubbell has a policy of continuous product improvement. We reserve the right to change design and specifications without notice.

© Copyright 2013 Hubbell Incorporated | Printed in U.S.A. | www.hubbellpowersystems.com/abchance

Digital Torque Indicator

For installing torques up to 30,000 ft.-lb.

Description

Using the Chance Torque Indicator, you can install screw anchors to a pre-determined torque value which gives a positive indication of anchor holding capacity in any soil type. This tool also helps your crew avoid excessive torsional loading which could cause damage to the anchor and/or anchor tools during installation.

The Indicator mounts between the Kelly bar adapter and drive tool or locking dog assembly.

The LED display is easy to read in full daylight and gives the operator a direct readout of installation torque at all times.

Key Benefits

- No Shear pins to replace.
- Operational temperature range:
  -40° to 80°C (-40° to 175° F).
- Accuracy:
  ±1.5% full scale at any reading.
- Torque is measured using strain gauges.
- Powered by a standard 9V battery
- Solid one-piece spool design to withstand bending loads. Top and bottom flange, each provides six holes tapped ½"-13 on a 5¼" bolt circle and twelve holes tapped ⅝"-11 on a 7⅝" bolt circle.

Digital Torque Indicator

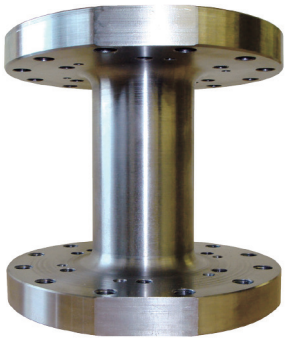
Solid one-piece spool design

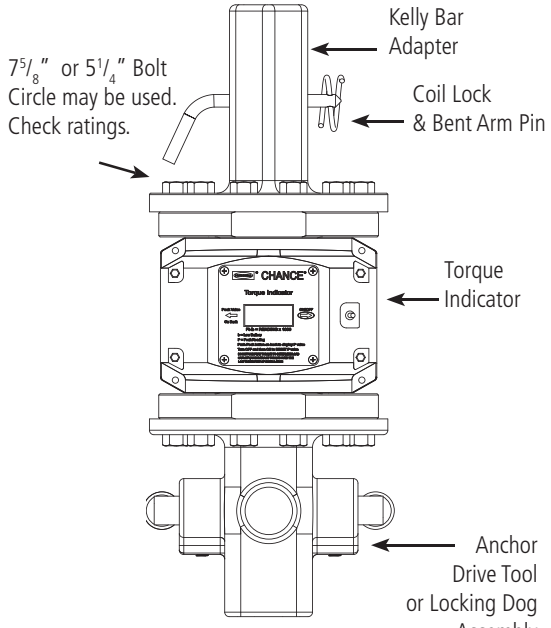

Cat. No.	Description	Weight, lb.
C3031578	Digital Torque Indicator	65
INCLUDES	12 ea. ½" Grade 5 bolts and lockwashers for 5¼" Bolt Circle tools, 24 ea. ⅝" Grade 2 bolts and lockwashers for 7⅝" Bolt Circle tools, Standard 9V battery.	

CHANCE™ DOWN. RIGHT. SOLID.
CHANCE Civil Construction
Hubbell Power Systems
210 North Allen Street
Centralia, Missouri 65240

Hubbell has a policy of continuous product improvement. We reserve the right to change design and specifications without notice.

© Copyright 2011 Hubbell Incorporated | Printed in U.S.A. | www.hubbellpowersystems.com/abchance